EPH-International Journal of Business & Management Science

MENTAL ACCOUNTING AND REMITTANCE DEPENDENCY AMONG AFGHAN HOUSEHOLDS: A BEHAVIOURAL FINANCE PERSPECTIVE

Mohammadullah Ibrahimi[*1], Abdul Ameen Rasikh[2], Arsalan Nawabi[3]

[1]Research Scholar, St. Joseph's Institute of Management (SJIM)-Bangalore, University of Mysore*
M.allah.ibrahimi@gmail.com, ORCID: 0009-0006-6723-4428
2 Research Scholar, Department of Management & Commerce, Maulana Azad National Urdu University
ameen.rasikh12@gmail.com, ORCID: 0009-0009-9849-0741
3Research Scholar, Department of economics, Babasaheb Bhimaro Ambedkar University, Lucknow,
arsalannawabi2020@gmail.com, ORCID: 0009-0005-7666-3278

Article History
Received : *2026-03-05*
Revised : *2026-05-06*
Accepted : *2026-07-21*
Published :*2026-08-20*

Abstract
This study investigated the influence of the dimensions of mental accounting on remittance dependency among Afghan households. Mental accounting was conceptualized as a multidimensional construct comprising mental accounting labelling (MAL), mental budgeting (MB), and Fungibility bias (FB). Using a quantitative research design, data were collected from 317 households through a structured 4-points Likert-scale questionnaire. The data were analyzed using structural equation modelling (SEM) to examine the relationship between dimensions of mental accounting and remittance dependency (RD). The findings indicated that only mental accounting labelling exhibited a significant positive relationship with remittance dependency ($\beta = 0.537$, $p < 0.001$), whereas Fungibility Bias ($\beta = 0.096$, $p < 0.05$) and Mental Budgeting ($\beta = -0.029$, $p = 0.708$) did not illustrate statistically significant association. These findings indicate that the dimensions of mental accounting do not contribute equally to explaining remittance dependency behavior among the sampled Afghan households. The study also found that remittances are primarily allocated to the consumption category of the households, particularly for daily needs, healthcare and urgent financial needs, while only a limited proportion was allocated toward productive categories such as investment and trade. Overall, the findings suggest that household's mentally categorize and manage remittance income differently from their ordinary sources of income, consistent with core theory of mental accounting. The study emphasizes the importance of understanding behavioral biases, particularly mental accounting and its dimensions, as well as remittance use when designing financial literacy initiatives and remittance management policies for similar households' populations.

Keywords: *Mental Accounting, Remittance, Households, Financial Decision-Making, Behavioural Finance, Afghanistan*

Vol. 12 Issue 4s (August, 2026)
ISSN: 2208-2190 Pages- 21-36
DOI: https://doi.org/10.69980/5vaja283

1. Introduction

Remittance is a key source of financial inflows for developing and conflict-affected economies, particularly in regions marked by poverty and high unemployment. According to the International Monetary Fund (IMF) and the President of the World Bank, remittances are money sent by migrants to their relatives in their home country, especially to those with low financial status (Malpass, 2022; IMF, 2009). This inflow is a tremendous source of income for most developing countries, particularly Afghanistan, and it increases each year. The unstable situation in Afghanistan has created many financial issues for households, most of which live below the poverty line (Khan, 2024); they mostly rely on the financial support of family members living abroad to cope with poverty.

Afghanistan is a country where most of the households struggling with entrenched poverty, less income, and a lack of access to formal financial services. The latest World Bank (2026) Afghanistan Development Report indicates that although Afghanistan's economy has seen some relative growth, the living standard of the people has not improved due to fast population growth, reduced per capita income and increased inflation, and poverty remains deep (world bank, 2026). In such circumstances, remittances might directly and indirectly affect income levels, as well as macroeconomic variables such as inequality, productivity, and poverty. It can said that it contribute positively to household welfare (Koc & Onan, 2001). Several studies indicated that as remittances flow in, the receiving country's economy is likely to improve. In economic downturns, remittances typically act as a countercyclical benefit, as migrants send savings to prevent economies from collapsing. Additionally, they allow developing countries to tap international capital markets at a lower cost of borrowing (IMF, 2007). Remittances, whether used for consumption, housing, or investments, create economic activity and increase demand for goods and services. The pivotal effect of remittances is not limited to macro-level indicators such as poverty alleviation, GDP growth, and overall development but also to micro-level indicators at the household level (Pant, 2008). Because remittances tend to be received directly by low-income families, they play a substantial role in combating poverty and are a significant part of the poverty-reducing picture.

Despite the critical significance of remittances, the majority of Afghan households allocate and use these inflows based on their preferences, which may not reflect the true nature of their actual life needs and are influenced by psychological factors. Behavioral finance literature suggests that households mostly make financial decisions based on emotions rather than rational calculation. In this regard, the role of behavioral biases, particularly mental accounting in this study, is more influential, as proposed by Richard Thaler (1999). Thaler suggested the dimensions of mental accounting, as mental accounting labelling, mental budgeting and fungibility bias. This theory suggests that people categories, label and allocate money differently, according to their source and purpose of use. Finally, this study's major focus is on these dimensions and suggests that Afghan households may treat remittances differently from their ordinary earnings, which will affect savings and spending behavior and may increase remittance dependency.

Remittances are an essential source of income for many families in Afghanistan, enhancing their quality of life and supporting the national economy to a significant extent (Katseli, 2006). The mechanisms through which these funds are utilized and their deployment should be better understood, not just as an academic exercise, but if we are to envisage efficacious interventions in Afghanistan that can translate into better development, poverty reduction and economic growth. Mental accounting, a core element of behavioural finance (Zhang, 2017), offers a compelling lens for exploring these processes. It includes the cognitive strategies people use to categories, allocate, and evaluate their resources. Through a synthesis of the literature on remittances, the dimensions of mental accounting and the unique and specific nature of the Afghan context, it proposes a model that summarizes how poverty, conflict, and deeply rooted cultural norms shape remittance spending and dependency behaviours and practices. Ultimately, this paper may help provide a more comprehensive picture of household financial flows in Afghanistan overall and is intended to help shape policy recommendations to minimize the impact of mental accounting on remittances at both the personal and national levels, where possible.

Insights into the impact of mental accounting dimensions on spending and saving practices among remittance-receiving Afghan households would be important for policymakers and financial institutions operating in the region, as they work to promote financial inclusion and literacy to ensure economic resilience. Much of the existing literature on remittance utilization has been macroeconomic, often focusing on poverty reduction and economic development (Adams & Cuecuecha, 2013; Ratha, 2019). Nonetheless, there is a gap in the literature from a behavioural finance perspective, especially in economies afflicted by

Vol. 12 Issue 4s (August, 2026)
ISSN: 2208-2190 Pages- 21-36
DOI: https://doi.org/10.69980/5vaja283

war, such as Afghanistan. The study results may provide deeper insights into remittance management and the role of behavioural Finance, and may also be beneficial for financial education programs and policy interventions to improve the utilization of remittances in Afghanistan.

2. Literature Review

2.1. Mental Accounting:

Mental accounting is one of the major principles of behavioural finance, and it refers to the fact that people do not treat all money as the same (Zhang, 2017). With the help of this concept, people categorise their money into various "buckets," each with its own set of rules and constraints (Thaler, 1999), which was initially presented by Richard Thaler in 1980 and later developed by him, Tversky and Kahneman (1981). This falls within the scope of cognitive biases, as individuals utilize it to organise and assess their financial activities by categorizing their money into distinct groups and classes, marking them as non-fungible assets (Liu & Chiu, 2015). Subsequent to the concept of mental accounting of Thaler, Haun et al (2013) proposed that while purchasing items, people make two mental accounts: first, the Joy of buying and second, the Pain of paying. Three theories of mental accounting have been introduced that describe how people separate their money into different categories: Category1: where they make a mental budget for cost categories; No.2 functional accounts: where consumers dedicate money for specific purposes, such as saving, emergencies, and food; and No.3 Hedonic framing: which represents how a consumer frames the purchase based on feelings and emotions attached to it (Zhang, 2017).

Mental accounting has a remarkable role in household financial decision-making, budgeting, spending and investment decisions (Zhang & Sussman, 2018; Zhang & Sussman, 2017), and it encompasses behavioural finance's principles, such as the categorization of expenses, allocation of the purpose of money, and cost-benefit analyses (Antonides & Ranyard, 2017). It can assist individuals in managing their finances by simplifying their choices, increasing control over their options, and enhancing their financial management skills (Antonides & Ranyard, 2017). This concept may not align with economic theory, but it allows people to prioritise happy experiences and spend freely, even if it is harmful to their health and thus makes them feel less guilty (Antonides & Ranyard, 2017). They could still be helpful in designing longer-term, sustainable financial solutions for the poor category of society (Robinson, 2001). For Instance, Microfinance can benefit from mental accounting, which aligns with the way how people perceive money and encourages responsible saving and borrowing, thereby improving their financial situation. Using human mental accounting to create products and services that align with people's money behaviour could lead to a more financially suitable world as microfinance becomes more widely used (Robinson, 2001; Zhang & Sussman, 2018).

Researchers have also found that mental accounting directs budgeting, spending, and investments and that the way the mind understands money profoundly affects people's behaviours with it. People, for instance, might more happily spend money from a separate "entertainment" account, rather than a "savings" account (Zhang, 2017), even though the total available funds are unchanged. From a wide range of fields, there is empirical evidence that mental accounting is a powerful factor in the decision to spend or save (Iram, 2021). At the most complex level, the policy system includes behavioural finance, which studies how individuals make financial decisions. The study examines how households consider money as a disposable or non-disposable resource, as well as how mental shortcuts and biases influence decision-making. For instance, loss aversion refers to the tendency to be angrier about losing money than gaining the same amount (Garling, 2009). Framing can significantly affect financial decisions through the phenomenon known as information encoding bias. Neoclassical economic models assume that decision-making is rational and preferences are fixed. Yet, the presence of mental accounting in finance suggests that these models do not have explanatory power (Garling, 2009).

To sum up, mental accounting shows how different labels affect people's feelings towards money, influencing their spending, saving, and financial decisions. Although complicated on the balance sheet, this strategy helps people manage their finances in the real world. Understanding this behaviour can help improve microfinance tools and financial solutions for low-income people.

Vol. 12 Issue 4s (August, 2026)
ISSN: 2208-2190 Pages- 21-36
DOI: https://doi.org/10.69980/5vaja283

2.2. Role of Mental Accounting in Utilization of Remittances:

The Afghan diaspora is working in various countries of the world, earning money and send it back to their home country to fulfil the needs of their families. The inflow of remittance is something very usual to Afghanistan, and it has a vast contribution to the economy of the country and the financial stability of households. As reported by the World Bank for July 2024, the inflow of remittances to the world is approximately USD857 billion, with USD320 million flowing to Afghanistan annually (WB- KNOMAD, 2024). In the light of behavioural finance, particularly mental accounting bias, this article illustrates how mental accounting influences the utilization of remittances among Afghan households, and to what extent they are dependent on remittances? And where do they spend this amount?

The possibility of analyzing remittances in the context of mental accounting is too high. Multiple studies have shown that households do not utilize the remittances in the same way as other income from different sources. But Individuals mentally divide their income by source into "accounts" for specific purposes, so that extra funds in one account, such as a windfall, do not simply replace money in another, such as wages (Villa, Barrett and Just, 2011). Mental accounting is all about categorizing money by individuals and households, which leads to different spending behaviours according to the source of funds (Thaler, 1999). Looking from the lens of remittances in Afghanistan, it may be mostly used for the saturation of the basic needs of the households, such as education, health, and food (Temory, 2024).

Naturally, when households receive remittances, they spend them on what they need, and they save them for their future purposes (Adams, 2002). Another study showed that Families who get remittances from overseas spend extremely little on household essentials like food, instead they allocate most of the funds to education and housing (Adams, Richard & Cuecuecha, 2010). Simultaneously, it has been explored by (kozel & alderman, 1990, and Chami, et al, 2005), who said that households use remittances for investments in a very beneficial parts of human life, such as education, health and savings. For instance, a study showed in Crop earnings, that the income from male-managed yam fields was primarily utilized to cover societal requirements like educational fees and staple grains for food. Alternatively, the proceeds from other male crops and women's plots were set aside for personal pleasures like tobacco, drink, finery, and luxury foods (Duflo & Udry, 2004). Another example from Uganda, when the treated nets were sent directly to the families, they made sure to save the nets for the most vulnerable members of the family, such as young children or the sick. However, if families were given funds to buy nets instead, the nets were frequently employed to protect the household's primary breadwinners (Hoffmann, 2007). Mental accounting can also have an impact on household food management since it allows people to customize their food choices as their income increases from various sources (Villa, Barrett and Just, 2011).

Mental accounting reveals the intricate ways in which households utilize remittance resources to fulfil the various needs caused by disruption. The reasons why households classify the remittances into various accounts might be attached with specific conditions, emotional tags, the perception of someone else's hard work and unexpected gifts, which are discussed by (Davis et al, 2009).

There is a term known as social transfer, which should be distinct from remittances and was articulated by Jennifer Waidler (2016) in her essay "On the Fungibility of Public and Private Transfers: a Mental Accounting Approach". He stated that social transfers are granted legally by the government under certain regulations and national policies, whereas remittances are issued unofficially by family members working abroad, usually without any specific rules, are emotionally charged, and are based on migration type. He argued that households differentiate the income from the government and the income they receive privately from their family members.

3. Theoretical & Conceptual Framework:

The conceptual framework of this study is grounded in Richard H. Thaler's 1985 theory of mental accounting, which posits that individuals do not treat their money as fungible but instead categorize it into separate mental accounts based on its source and purpose. To explain this in depth, the behavioural Life-Cycle theory, presented by Shafrin & Thaler in 1988, is employed to show that individuals allocate money to separate accounts and exhibit different saving and spending behaviour across them. Finally, the prospect theory of Kahneman & Tversky (1979) is also used to explain that cognitive biases regarding gains and losses influence individuals' financial decisions. Altogether, these theories, particularly mental accounting

Vol. 12 Issue 4s (August, 2026)
ISSN: 2208-2190 Pages- 21-36
DOI: https://doi.org/10.69980/5vaja283
dimensions provide comprehensive behavioural insights into how households organize, allocate and label income from remittances.
In this paper the three dimensions of mental accounting viz, mental accounting labelling (MAL), mental budgeting (MB), and fungibility bias (FB) are considered important behavioral factors influencing household financial decision-making regarding the utilization of remittances. The proposed framework examines how households cognitively categorize remittance income based on their perceptions and mental financial classifications.
Mental accounting is considered a multidimensional behavioral construct that shows how households perceive, separate, and spend money according to its source. To understand this bias deeply, the paper operationalized it into its core fragments, (MAL), (MB), and (FB), which can be used to measure the dependency of households on remittances, and they are called independent variables in this study. This process resulted in the further step, which shows the dependency of households on remittances.

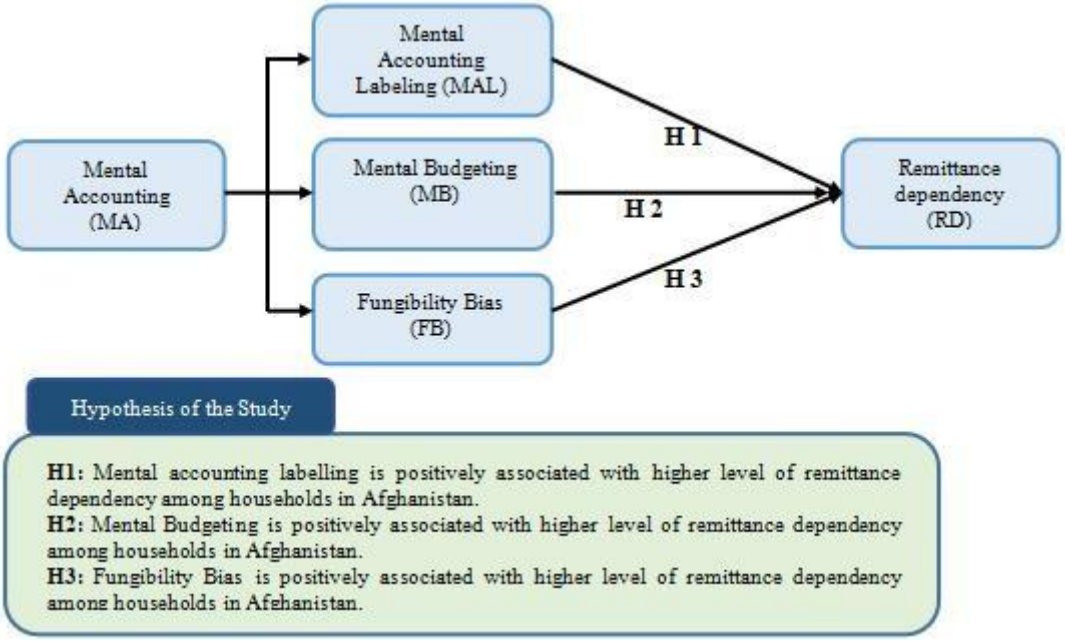

Figure No.1: Conceptual framework

Objectives

The main objective of this study is to examine the influence of mental accounting dimensions, including mental accounting labelling (MAL), mental budgeting (MB), and Fungibility Bias (FB), on the remittance dependency among households in Afghanistan.

Research Question

How does mental accounting dimensions influence remittance dependency and the utilization of remittances among households in Afghanistan?

4. Research Methodology

A quantitative research design is used to find the impact of mental accounting dimensions on the remittance dependency and utilization of remittance by households in Afghanistan. The data was collected through a structured questionnaire having 4-points likert scale and the statement of items were predefined to each variable. Since the aim of this study is to test the hypothesized relationship and analyses the behavioral patterns using statistical techniques, so that the quantitative research design was considered as a suitable approach. The questionnaire consists of three sections; the first section of the questionnaire asks about the demographics such as Age, Education, Monthly income, Family size, and province in Afghanistan. In addition to it, the last question of the first section was asking about whither the household receive the remittances or no? Those who select Yes, they were giving a chance to go ahead and answer the next questions of the Google form. But those who select No, they were lead to leave the Google form, because the Google form intended to collect the data from those who have income from the remittances. In second

Vol. 12 Issue 4s (August, 2026)
ISSN: 2208-2190 Pages- 21-36
DOI: https://doi.org/10.69980/5vaja283

section another question was asked to show wither the person is agree to fill the form individually or he will fill along with their family member? Those who select "Yes we are setting and filling the form together" they were allowed to go ahead and fill the form. But those with rejecting to fill it together, they were automatically lead to leave the form. Because we needed to collect the ideas of a household which shows the participation of all members of a family, particularly husband and wife. The third section included the main questions of the survey form which was categorized into sub-categories such as Mental accounting Labelling, Mental Budgeting, Fingibility bias, questions about household's dependency on remittance and the place where do they spend this amount. All the questions were prepared in 4-points likert scale ranging between "Strongly Disagree, Disagree, Agree, & Strongly Agree".

4.1. Data collection

This paper used Primary data, collected from households residing in different provinces in Afghanistan. The structured questionnaire were distributed to the households through online and offline methods. The total households which the questionnaire were distributed through online mode are 800 households. Out of them a number of 304 households responded and the remaining households rejected to respond or most of them did not show their interest to contribute to such surveys. The summary showed that the total number of 197 respondents receive remittances from outside Afghanistan and the remaining (107) had no income from remittances. Since the sampling unit to this study was household, where the respondents must be both husband and wife, which will help us to find more clear result. However, among 197 households who had income from remittance only 180 showed interest to sit with their wives and fill the survey form, the remaining 17 respondents were not agree in the participation of their wives to such financial decisions. So a total and net responses that we got to this paper through online mode are 180 respondents.
Moreover, we distributed the hard copy of Google form to the people in Kabul province to more than 300 households. Since we tried to convinced the households and give more clarification after their frequent questions, a total of 137 respondents who had remittance income, showed their interest to fill the form along with their family members. So, totally 137 responses received from offline mode of data collection. As a whole, the total numbers of respondents form both the ways (online and offline) were 317 respondents and have been used for the analysis after data screening.

Table 1: Mode of Data collection

Online mode		**Offline mode**	
With total People shared	1000	With total People shared	300
Total responses received	304	Total responses received	137
Had Income of Remittances	197	Had Income of Remittances	137
Ready to fill the form along with spouse	**180**	Ready to fill the form along with their spouse	**137**
Total Responses from both the ways (180 + 137)		**317**	

4.2. Data Analysis

In this research, we used structural equation modelling (SEM) to analyze the role of mental accounting on the remittance dependency of households Afghanistan. The collected data were analyzed in JASP statistical software.

Descriptive analysis

Descriptive statistics were conducted to examine the completeness of the key demographic variables, including age, education, monthly income, and family size. The results indicate that all variables have 317 valid observations with no missing data. This demonstrates that the dataset is complete and suitable for further statistical analysis. Table No.2 shows the demographic data of the respondents consists of Age, education, monthly income and family size and their response rate about each category. In general, it can be seen that the demographic profile demonstrates that the sample used is well-organized to assist in the study of the behavior of the financial decision-making process and the use of remittances.

Vol. 12 Issue 4s (August, 2026)
ISSN: 2208-2190 Pages- 21-36
DOI: https://doi.org/10.69980/5vaja283

Table 2: Demographics of the respondents

Demographics	Category	Frequency	%
Age	25-35	89	28.1
	35-45	109	34.4
	45-55	101	31.9
	Above 60	18	5.7
Education	No Education	34	10.7
	12th	87	27.4
	Bachelor	114	36
	Master	82	25.9
Monthly Income	Less than 5000	48	15.1
	Less than 12500	83	26.2
	Less than 20000	89	28.1
	Above 20000	97	30.6
Family Size	2-3	31	9.8
	4-6	112	35.3
	7-8	102	32.2
	9-10	49	15.5
	Above 10	23	7.3

Analysis of Remittance Utilization Patterns

Figure no.2 shows the spending of remittances by households on seven categories, and this shows the distinct level of priority. The highest frequency (238) belongs to daily needs which means a great concern with immediate consumption and short-term survival in terms of finances. This implies that the households are mainly liquidity constrained and focus more on what they need to spend rather than planning in the long run. The other categories that are considered the most important are health (177) and education (170), which show some concern about developing human capital. They have lower values than daily needs, however, meaning that these investments are secondary. Likewise, only urgent payments (161) is relatively frequently used, which is indicative of reactive financial behavior as households react to urgent financial exigencies. Conversely, less attention is paid to loan payment (92) and especially saving and investment (63) indicating poor financial plans with regard to the future. The lowest level, construction (48), once again proves the point that long-term asset-building is not a major concern. In general, the trend indicates a consumer based financial system, where minimal focus is made on saving and investment. Behaviourally, this is in line with present bias and mental accounting, where families are more concerned about immediate and visible needs, as opposed to financial stability in the future.

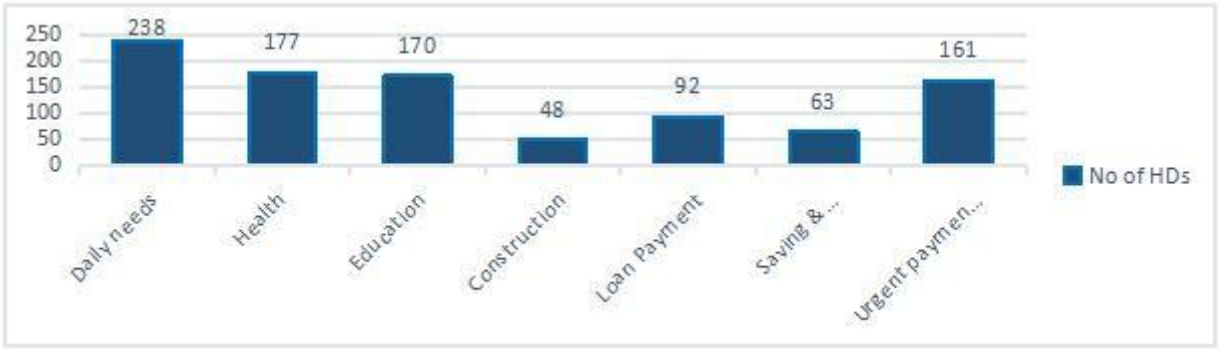

Figure No.2: Household's Expenses

Vol. 12 Issue 4s (August, 2026)
ISSN: 2208-2190 Pages- 21-36
DOI: https://doi.org/10.69980/5vaja283

Data Validity and Reliability

Table 3 presents the result of validity and reliability. Cronbach's alpha and McDonald's omega were used to test internal consistency of the measurement scale. The result shows that all the constructs have a good reliability. The MAL had five items, one item is removed and the remaining four items are resulted with Cronbach's alpha (MAL = 0.759), Mental Budgeting has two items and the test result shows that Cronbach's alpha is (MB = 0.720), as well as Fungibility bias has three items and the test result indicates that Cronbach's alpha is (FB = 0.750), Finally the Remittance dependency has two items and the test result shows (RD = 0.863) which is above the standard level of 0.70. It is an indication that the items in the scale are consistent in the measurement of the underlying construct and can be further statistically analyzed.

CFA analysis, which was conducted to evaluate the measurement model by examining the relationship between the latent constructs and the observed indicators (Hair et al., 2022; Kline, 2016). The factor loading outcomes of the indicators show that the majority of measures load considerably and strongly on their intended constructs, supporting the adequacy of the measurement model. All retained factor loadings were statistically significant ($p < .001$) and thus each of the indicators is a meaningful contribution to its latent construct.

The MAL construct shows a strong relationship, with factor loadings between 0.712 and 0.751 (excluding MAL5, which has a loading of 0.303), implying it is of little significance in the analysis. The Mental Budgeting (MB) construct shows strong loadings, particularly MB2 (0.892) and MB1 (0.732), which remain acceptable. Similarly, the Fungibility Bias (FB) construct shows good loadings: FB1 (0.798), FB2 (0.751), and FB3 (0.839), indicating good reliability. The remittance dependency constructs have indicated a strong representation of the latent variable loadings of the Remittance Dependency construct (RD1 = 0.894; RD2 = 0.849). The study used Average Variance Extracted (AVE) and Composite Reliability (CR) to evaluate convergent validity. The table's findings show that all constructs' CR values fall between 0.864 and 0.798, while the AVE values for MAL (0.536), MB (0.666), BF (0.635), and RD (0.760) all surpassed the suggested cutoff point of 0.5. Taken together, the significant factor loadings, acceptable CR values and sufficient AVE values confirm that the constructs exhibits good reliability and satisfactory convergent validity. The result of the analysis are in the Table No.3:

Table No.3: CFA Factor Loading result

Construct	Initial Items	Final Items	Item	Loading	AVE	Composite reliability (rho_c)	McDonald's Omega	Cronbach's Alpha	Convergent validity (CV)
MAL	5	4	MAL1	0.751	0.536	0.811	0.712	0.759	satisfactory
			MAL2	0.714					
			MAL3	0.750					
			MAL4	0.712					
MB	4	2	MB1	0.732	0.666	0.825	0.726	0.720	satisfactory
			MB2	0.892					
FB	4	3	FB1	0.798	0.635	0.889	0.768	0.749	satisfactory
			FB2	0.751					
			FB3	0.839					
RD	2	2	RD1	0.894	0.760	0.900	0.828	0.863	satisfactory
			RD2	0.849					

Correlation

Pearson's correlation has also been used to find the relationship between all dimensions of mental accounting and remittance dependency of households. In addition, the descriptive statistics and discriminant validity of the variables are shown in Table 4. The mean calculation indicated a variation (FB = 2.394 to RD = 3.192), and the standard deviations (SD) of responses were (0.700 to 0.877), which were acceptable. Furthermore, the results of Pearson's correlation analysis indicated that all constructs were statistically and significantly positively correlated ($p < 0.001$) with one another, as shown in the table. Specifically, Mental accounting labelling (MAL) is positively related with Mental budgeting (MB) ($r = 0.563$), Fungibility bias ($r = 0.432$) and Remittance dependency ($r = 0.469$). Likewise, Mental budgeting (MB) is positively correlated with Fungibility bias (FB) ($r = 0.598$) and with RD ($r = 0.350$). Similarly, Fungibility Bias showed a positive correlation with RD ($r = 0.334$). Furthermore, the square root of (AVE) was calculated to obtain the inter-

Vol. 12 Issue 4s (August, 2026)
ISSN: 2208-2190 Pages- 21-36
DOI: https://doi.org/10.69980/5vaja283

construct correlation of the correlation matrix, which ranges from 0.732 to 0.872, suggesting all the values are higher than the inter-construct correlation. Hence, discriminant validity is supported according to the Fornell-Larcker criterion.

Table 4: Descriptive Statistics, Correlations, and Discriminant Validity

Variables	Mean	SD	MAL	MB	FB	RD
MAL	2.949	0.700	0.732			
MB	2.785	0.725	0.563***	0.816		
FB	2.394	0.776	0.432***	0.598***	0.797	
RD	3.192	0.877	0.469***	0.350***	0.334***	0.872

Structured Equation Model (SEM):

A structural equation model has been used for the statistical analysis of this study. Researchers widely use this analysis to test and demonstrate the direct and indirect relationships within the model. The following table indicates an excellent fit of the data to the model, as all fit indices exceeded the recommended thresholds shown in Table No. 5.

Table No.5: Fit Indices

Fit Indices	Value	Threshold	Description
CFI	0.944	≥ .95	Acceptable Fit
TLI	0.919	≥ .95	Acceptable Fit
NFI	0.917	≥ .90	Acceptable Fit
NNFI	0.919	≥ .95	Acceptable Fit
RMSEA	0.075	≤ .06	Acceptable Fit
SRMR	0.047	≤ .08	Good Fit
GFI	0.946	≥ .95	Acceptable Fit
χ^2/df (Normed Chi-square)	2.82	< 3	Good Fit

The fit indices show that the proposed model has a generally acceptable to good fit to the observed data. The Comparative Fit Index (CFI = 0.944) is above the generally accepted threshold of 0.90, indicating a good model fit. Tucker-Lewis Index (TLI = 0.919) and Non-Normed Fit Index (NNFI = 0.919) are above 0.90, indicating an acceptable, although marginal, fit. Moreover, the normed Chi-square (χ^2/df) is 2.82, indicating a good model fit. Overall, these indices indicate that the model fits the data quite well.

Moreover, Table No. 6 indicates the output of SEM modelling and hypothesis testing. JASP software was used to test the relationship between remittance dependency and the dimensions of mental accounting using structural equation modelling (SEM). Mental accounting dimensions were treated as exogenous latent variables that directly affected households' remittance dependency. The bootstrapping results indicated a strong positive effect of MAL on RD ($\beta = 0.537$, SE = 0.082, t = 6.518, $p < 0.001$), thus supporting H1. Conversely, Mental Budgeting did not have an impact on Remittance Dependency ($\beta = -0.029$, SE = 0.076, t = -0.375, p = 0.708); thus, H2 was not supported. Similarly, Fungibility Bias has a positive but insignificant impact on Remittance Dependency ($\beta = 0.096$, SE = 0.092, t = 1.040, p = 0.299), leading to the rejection of H3. Overall, the SEM results indicate that among the three dimensions of mental accounting, only mental accounting labelling (MAL) significantly predicts remittance dependency; the other two dimensions have no impact.

Table No.6: Hypothesis result

Hypothesis	Std. β	Std. Error	t-value	p-value	CI Lower 95%	CI Upper 95%	Decision
MAL → RD	0.537	0.082	6.518	< .001	0.494	0.697	**Supported**
MB → RD	-0.029	0.076	-0.375	0.708	-0.179	0.121	Not Supported
FB → RD	0.096	0.092	1.040	0.299	-0.085	0.276	Not Supported

Vol. 12 Issue 4s (August, 2026)
ISSN: 2208-2190 Pages- 21-36
DOI: https://doi.org/10.69980/5vaja283

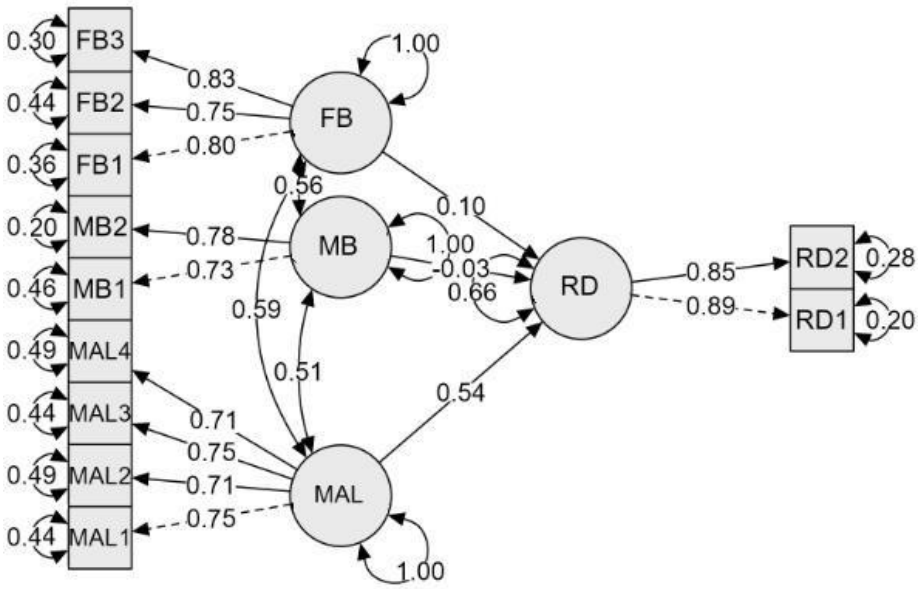

Figure No.3: Path Diagram

5. Findings

This study examined the relationship between the dimensions of mental accounting, such as MAL, MB, and FB, and remittance dependency behaviour in households by using correlation analysis, confirmatory factor analysis (CFA), and structural equation modelling (SEM) at the household level in Afghanistan. The demographics of the respondents indicate that the majority of them were aged between 35 - 45 years old (almost 34.4%); 31.9% of the respondents belong to the 45-55 year-old category; and 28.1% belong to the 25-35 year-old category, with only 5.7% of the respondents belonging to the above 60 category. Most of them, almost 36%, have a bachelor's degree; around 27.4% have only graduated from 12th grade; 25.9% are master's degree holders; and around 10.7% have no formal education. Moreover, through the lens of monthly income, the majority of households earn more than 20000 AFN, representing 30.6% of respondents, followed by 28.1% earning less than 20000 AFN and 26.2% earning less than 12500 AFN per month. The analysis found that the majority (35.3%) of the households consisted of 4-6 members, and (32.2%) of the respondents showed 7-8 members, which depicts a large family structure that receives regular remittance income.

The result describes the correlation between the study's independent and dependent variables and indicates a significant positive correlation among all variables. MAL showed a stronger association with remittance dependency ($r = 0.469$, $p < 0.001$), followed by MB ($r = 0.350$, $p < 0.001$) and FB ($r = 0.334$, $p < 0.001$). The relationship between MB and FB was also significant ($r = 0.598$, $p < 0.001$). Confirmatory factor analysis (CFA) was conducted to assess the model's fit. The model demonstrated that it is fit and acceptable after a few weak items were removed. The results (CFI = 0.944, TLI = 0.919, NFI = 0.917, NNFI = 0.919, RSMEA = 0.075, and SRMR = 0.047) indicate that the model is satisfactory and well-fit. Moreover, the study examined and reported the confirmation of convergent validity and reliability. AVE values ranged between 0.536 and 0.760, while the composite reliability values ranged between 0.811 and 0.900, and the factor loadings ranged between 0.712 and 0.894. The structural equation model (SEM) was applied to examine the relationships among all variables. The result of the model was statistically significant for MAL and indicated a strong positive effect on remittance dependency ($\beta = 0.537$, $p < 0.001$), but not for MB ($\beta = 0.029$, $p = 0.708$). FB could not illustrate a significant effect on remittance dependency ($\beta = 0.096$, $p = 0.299$).

Vol. 12 Issue 4s (August, 2026)
ISSN: 2208-2190 Pages- 21-36
DOI: https://doi.org/10.69980/5vaja283

6. Discussion

This paper investigates the influence of mental accounting dimensions on remittance dependency, examining how this bias affects the utilization of remittances among Afghan households. The study aimed to test the hypothesis, “The dimensions of mental accounting have a significant influence on remittance dependency among households in Afghanistan," by examining three dimensions of mental accounting: mental accounting labelling, mental budgeting, and fungibility bias. The study's outcomes reveal the important roles of psychological factors and cognitive biases in shaping household’s remittance dependency.

The results of the descriptive analysis indicate that the sampled afghan households in Afghanistan belong to economically active, relatively large households, receive regular remittance inflows, and play a critical role in their financial stability. Despite the moderate educational levels of most respondents, households demonstrated behavioral income categorization, indicating the presence of mental accounting bias among them. However, the findings further reveal that the dimensions of mental accounting do not contribute equally to explaining remittance dependency. The outcomes indicate that only mental accounting labelling was significantly related with remittance dependency among sampled households in Afghanistan, particularly in Kabul. This finding provides an important evidence regarding households’ financial behavior, while acknowledging that, due to the sampling characteristics, it should not be generalized to all Afghan households.

The significant positive relationship between mental accounting labelling and remittance dependency strongly supports Richard Thaler's mental accounting theory, which argues that individuals violate the fungibility characteristic of money by assigning psychological labels to their income based on its source and intended recipients. Therefore, remittances in the context of Afghanistan may be perceived as a “special-purpose” income that is mentally allocated for household expenditures in a particular domain of their lives, ultimately leading to increased remittance-dependency behaviour. Once remittances are psychologically labelled for urgent usage purpose, households become more likely to rely on them continuously. This finding suggests that the psychological categorization of remittance income plays an important role in reinforcing remittance dependency beyond purely economic considerations. Moreover, the CFA results confirmed that the constructs effectively measured the behavioural dimensions of the household's finances. Additional theoretical and practical insights have been provided after the application of SEM analysis. This means that mental accounting labelling had a strong positive impact on remittance dependency, indicating that the psychological segregation of remittance income largely shapes families' financial dependence on it.

Conversely, households' remittance dependence was not significantly influenced by fungibility bias and mental budgeting, leading to the rejection of corresponding hypotheses. This paper presents plausible explanations to this reason, that budgeting practices do not necessarily determine whether households become dependent on remittance income; rather, they reflect how households manage limited financial resources after remittances have been received. In Afghanistan, where remittances are primarily used for basic needs of households such as food , healthcare and other urgent need, budgeting functions mainly as a short-term financial management tool rather than a determinant of long-term dependency. This interpretation is also consistent with the Behavioural Life-Cycle Hypothesis, which suggests that mental budgeting is more effective when households possess sufficient financial flexibility to allocate resources across competing goals. The findings suggests that it might be due to the prioritization of immediate financial needs over formal budgeting practices, or to a focus on short-term expenditure management tools rather than mechanisms that affect long-term dependency behaviour. This means that when remittances are primarily allocated to needs such as food, healthcare and education, the behavioural distinction among different categories of money may be reduced. Another reason could be the prioritization of urgent financial needs over structured budgeting discipline, which leads to a weak influence of mental budgeting. In addition, the inconsistent flow of remittances, considerable family size, collective decision-making structures, and the volatile economic environment could be factors leading households to allocate more resources to urgent needs instead of engaging in regular, systematic budgeting to create a stable budgeting system that lessens the use of personal budgeting methods.

Similarly, Fungibility Bias did not serve as a significant predictor of remittance dependency. One possible explanation is that remittances are typically perceived as an independent income source designated for specific household expenditures, rather than as funds that can easily replace other financial assets. Given that

Vol. 12 Issue 4s (August, 2026)
ISSN: 2208-2190 Pages- 21-36
DOI: https://doi.org/10.69980/5vaja283

remittances are mainly allocated for essential household needs, households may have regarded them as non-fungible assets with established psychological significance. The tendency to replace remittance income with alternative revenue sources is of diminished significance in elucidating dependency. The substantial influence of mental accounting labelling suggests that the initial psychological classification of remittance income is more powerful than concerns about its fungibility. The predictive capability of Fungibility Bias is reduced when remittances are psychologically allocated for essential household expenses, resulting in limited alternatives for households to reallocate these resources.

Moreover, the long-term economic instability, poverty, unemployment and financial uncertainty in Afghanistan may override some of the behavioural aspects of mental accounting. Such structural economic constraints limit the discretion of households in their financial decisions. Households therefore prioritise immediate consumption over structured budgeting or the substitution of different income sources. Thus, Mental Accounting Labelling was the only behavioural dimension significantly linked with remittance dependency. However, Mental Budgeting and Fungibility Bias were not significantly associated with remittance dependency. To summarise, our findings suggest that remittance dependency results from both structural economic conditions and behavioural financial processes. Structural constraints account for the dependency of households on remittances, while Mental Accounting Labelling explains how households psychologically sort and manage remittance income after receipt. Thus, this study adds to the growing literature on behavioural finance by extending Mental Accounting Theory to the context of remittance-dependent households in a conflict-affected economy such as Afghanistan.

7. Policy Implication

The findings of extant research suggest a range of policy implications for Afghanistan. Since this study examines the influence of mental accounting dimensions on households' remittance dependency behaviour, it suggests that remittance dependency depends not only on income-related factors but is also deeply shaped by psychological and behavioural factors, such as mental accounting and its dimensions. So the policies must be accountable for responding beyond traditional income-support methods and for employing behavioural finance theories and concepts in the financial policies of households in Afghanistan.

First, mental accounting labelling results showed that Afghan families psychologically Classify remittance income differently from their ordinary monthly income. And mostly, they consider it as a unique amount to be used for a specific purpose. This attitude can prolong dependence on remittances and reduce interest in investing. Therefore, policymakers should develop comprehensive financial literacy and public awareness programs for households in urban and remote areas to encourage them to save or invest a large share of remittance income. This can increase people's financial awareness, leading to greater savings, investment, entrepreneurship, agriculture, and SMEs. Eventually, households will transition from permanent consumers to small investors who can contribute to society in the production process. Second, the fungibility bias result shows that Afghan households do not treat their income sources equally, which is contrary to classical economics, but rather view each as separate and with different values. This means that the flow of remittances is separated from the worker's labor income and spent differently. To prevent this type of household behaviour, Da Afghanistan Bank (DAB), microfinance institutions, and other non-governmental organizations (NGOs) should develop a range of remittance-related financial products, such as savings accounts, micro-investment schemes, and commitment-based savings mechanisms. According to international studies, integrating remittances into formal financial services increases household financial resilience and reduces reliance on overconsumption.

Third, this research highlights the critical need for financial inclusion in Afghan society. As the World Bank report shows, nearly 85% of Afghan adults do not have a bank account (World Bank); financial literacy and trust in financial institutions remain very low. To address the financial literacy gap, the Afghan government, in collaboration with the World Bank, announced a national strategy for access to financial services in 2019 (World Bank, 2019). This is one of the basic needs of Afghan society, and there is an urgent need to accelerate the use of formal financial services and online payments (World Bank Blogs). The current study supports this policy effort by demonstrating that behavioural money management practices strongly influence household financial behaviour. Therefore, expanding digital payment systems and formal money transfer channels may not only improve financial access but also help households adopt a more structured and transparent approach to financial management. Fourth, the use of remittances in the agricultural sector, the establishment of small businesses, vocational training for youth and women, and in general the growth of

Vol. 12 Issue 4s (August, 2026)
ISSN: 2208-2190 Pages- 21-36
DOI: https://doi.org/10.69980/5vaja283

innovation will move Afghanistan, which relies on foreign aid, towards self-sufficiency. If families only wait to receive and spend remittances, we can say with certainty that production levels will decline and unemployment will increase in society. Policymakers should propose plans that both encourage and promote family growth. This means that efforts should be made to ensure that people spend their remittances in these areas. The experience of other countries shows that when remittances are used in the manufacturing and productive sectors, the economy is strengthened and the risk of long-term dependence is reduced.

Finally, the study suggests that designing future policies to reduce poverty and promote financial development in Afghanistan should also consider the impact of behavioural finance concepts. Because policies proposed based on traditional economics often assume that household and individual decisions are logical and rational. However, the findings of this paper depict that households' financial decisions are often influenced by psychological biases such as mental accounting. Therefore, policymakers and other relevant agencies should strive to include a range of bonuses and opportunities, such as behavioural incentives, budgeting skills, and encouragement of household savings, when conducting financial literacy programs and remittance management to encourage better financial behaviour and reduce remittance-dependent behaviour among Afghan households.

8. Conclusion

This study investigated the influence of mental accounting dimensions on the remittance dependency of afghan households to identify the remittance utilization of sampled households in Afghanistan. The research concentrated on one behavioural bias, "Mental Accounting," with its three dimensions, viz., mental accounting labelling, mental budgeting, and fungibility bias, as an independent variable, and remittance dependency of households as a dependent variable. Correlation analysis, CFA, and SEM modelling are used for data analysis. The outcomes indicate that mental accounting makes a significant contribution to shaping financial behaviour and remittance dependency among households in Afghanistan. More specifically, only Mental Accounting Labelling exhibited a strong and positive impact on households' remittance dependency, where families behaviourally categories their remittances differently from other income. However, Fungibility bias and mental budgeting have not contributed to this behaviour, and the evidence shows that remittances are not treated as a separate, non-fungible resource alongside other income sources. These outcomes could expand the theoretical and practical value of mental accounting for remittance-dependent households in a conflict-affected, economically backward region such as Afghanistan. The study concluded that remittance dependency is not only due to financial requirements, but also highly influenced by behavioural factors and psychological biases. Therefore, policymakers are requested to suggest integrating this phenomenon with financial literacy and remittance management skills in publicly funded financial awareness programs.

9. Limitations of the Study & Future Research

Despite suggesting options for future research, this study has limitations. For instance, the study adopted a cross-sectional research design, which limits the ability to establish a causal relationship between variables. Therefore, a need to employ a longitudinal research design or comparative studies across rural and urban regions to understand the effects of these biases on remittance utilization and households' financial behaviour is highly warranted. Moreover, the data were collected from a limited number of respondents, and the majority responded from Kabul, the capital city of Afghanistan. This reason can reduce the likelihood of generalizing the effect of outcomes to other regions within Afghanistan. To make a general decision, future research can use more geographically diverse and nationally representative samples to improve the generalizability of the results in Afghanistan. Another limitation of this research is the focus on only mental accounting bias, given the limited research in the field of behavioral finance. Future research may extend the study by incorporating additional biases, such as financial literacy, overconfidence, and self-control...etc.

Acknowledgement

This research is the result of fully integrated and shared collaboration among all authors whose combined expertise, critical insight, and sustained commitment shaped every stage of the study, from its conceptual foundation and theoretical grounding in the literature of behavioral finance, to its empirical design, analysis, and interpretation of findings. The authors are also thankful to ***Dr. Anup Krishnamurthy***, the research supervisor of *1 and associate professor at SJIM, for his valuable guidance, critical comments, and constant

Vol. 12 Issue 4s (August, 2026)

ISSN: 2208-2190 Pages- 21-36

DOI: https://doi.org/10.69980/5vaja283

encouragement during the course of this study. The authors gratefully recognize the earlier work of the scholars and researchers on behavioral economics and behavioral finance that aided in the framework of the present study, and the respondents who generously donated their time and participation.

References

1. Khan, H. (2024, July 1). Charting Afghanistan's economic future: Recommendations for reform. 9DASHLINE. https://www.9dashline.com/article/charting-afghanistans-economic-future-recommendations-for-reform-1
2. Adams Jr, R. H. (2002). Precautionary saving from different sources of income: evidence from rural Pakistan. Available at SSRN 634474.
3. Adams Jr, R. H., & Cuecuecha, A. (2010). Remittances, household expenditure and investment in Guatemala. World development, 38(11), 1626-1641.
4. Adams, R. H., & Cuecuecha, A. (2013). The Impact of Remittances on Investment and Poverty in Developing Countries. World Development, 41, 1–12.
5. Alderman, H., & Paxson, C. H. (1994). Do the poor insure? A synthesis of the literature on risk and consumption in developing countries. Economics in a Changing World: Volume 4: Development, Trade and the Environment, 48-78.
6. Barajas, A., Chami, R., Fullenkamp, C., Gapen, M., & Montiel, P. (2018). The remittance trap. Finance & Development, 55(3). International Monetary Fund. https://www.elibrary.imf.org/view/journals/022/0055/003/article-A012-en.xml
7. BBC News فارسی. (2021, June 16). میفرستند افغانستان به خارج از "الر میلیون ۷۰۰" سالنه افغانها. BBC News فارسی. https://www.bbc.com/persian/afghanistan-57501057
8. Beath, A., Christia, F., & Enikolopov, R. (2013). Empowering women through development aid: Evidence from a field experiment in Afghanistan. American Political Science Review, 107(3), 540-557.
9. Berg, R. C., Bledsoe, R., & Ferguson, M. (2025, January 15). Understanding the impact of remittances on Mexico's economy and safeguarding their future impact. Center for Strategic and International Studies. https://www.csis.org/analysis/understanding-impact-remittances-mexicos-economy-and-safeguarding-their-future-impact
10. Callen, M., Isaqzadeh, M., Long, J. D., & Sprenger, C. (2014). Violence and risk preference: Experimental evidence from Afghanistan. American Economic Review, 104(1), 123-148.
11. Chami, R., Fullenkamp, C., & Jahjah, S. (2005). Are immigrant remittance flows a source of capital for development?. IMF Staff papers, 52(1), 55-81.
12. Davies, S., Easaw, J., & Ghoshray, A. (2009). Mental accounting and remittances: A study of rural Malawian households. Journal of Economic Psychology, 30(3), 321-334.
13. Demirgüç-Kunt, A., & Klapper, L. (2013). Measuring financial inclusion: Explaining variation in use of financial services across and within countries. Brookings papers on economic activity, 2013(1), 279-340.
14. Demirgüc-Kunt, A., Klapper, L. F., & Panos, G. A. (2011). Entrepreneurship in post-conflict transition 1. Economics of transition, 19(1), 27-78.
15. Duflo, E., & Udry, C. R. (2004). Intrahousehold resource allocation in Cote d'Ivoire: Social norms, separate accounts and consumption choices.
16. Gärling, T., Kirchler, E., Lewis, A., & Van Raaij, F. (2009). Psychology, financial decision making, and financial crises. Psychological Science in the Public Interest, 10(1), 1-47.
17. Hahn, L., Hoelzl, E., & Pollai, M. (2013). The effect of payment type on product-related emotions: evidence from an experimental study. International Journal of Consumer Studies, 37(1), 21-28.
18. Hoffmann, V. (2007). Mental accounts, gender, or both? The intrahousehold allocation of free and purchased mosquito nets. Working Paper, 2007, http://citeseerx. ist. psu. edu/viewdoc/download.
19. Hair, J., & Alamer, A. (2022). Partial Least Squares Structural Equation Modeling (PLS-SEM) in second language and education research: Guidelines using an applied example. Research methods in applied linguistics, 1(3), 100027.
20. IMF (2007): Impact of Remittances on Poverty and Financial Development in Sub-Saharan Africa https://www.elibrary.imf.org/view/journals/001/2007/038/001.2007.issue-038-en.xml
21. International Monetary Fund. (2008). Chapter 2: Understanding remittances. In International transactions in remittances: Guide for compilers and users (pp. 5–10). https://www.imf.org/external/np/sta/bop/2008/rcg/pdf/ch2.pdf
22. International Monetary Fund. (2009). Balance of payments and international investment position manual (6th ed.). https://www.imf.org/external/pubs/ft/bop/2007/bopman6.htm
23. International Monetary Fund. (2024). Remittances in times of uncertainty: Understanding the dynamics and implications (IMF Working Paper No. 24/XXX). International Monetary Fund.

Vol. 12 Issue 4s (August, 2026)

ISSN: 2208-2190 Pages- 21-36

DOI: https://doi.org/10.69980/5vaja283

https://www.imf.org/en/Publications/WP/Issues/2024/11/22/Remittances-in-Times-of-Uncertainty-Understanding-the-Dynamics-and-Implications-557507

24. International Organization for Migration. (2015). Afghanistan Remittance Overview and Trends. https://afghanistan.iom.int/sites/g/files/tmzbdl1071/files/documents/afghanistan_migration_profile_annex_-_remittances.pdf
25. Iram, T., Bilal, A. R., & Latif, S. (2024). Is awareness that powerful? Women's financial literacy support to prospects behaviour in prudent decision-making. Global Business Review, 25(5), 1356-1381.
26. Jack, W. & Suri, T. (2013). Risk sharing and transactions costs: evidence from kenya"s mobile money revolution. American Economic Association. https://doi.org/10.1257/aer.104.1.183
27. Katseli, L. T., Lucas, R. E., & Xenogiani, T. (2006). Effects of migration on sending countries: what do we know?
28. Kline, R. B. (2012). Assumptions in structural equation modeling. Handbook of structural equation modeling, 111, 125.
29. Koc, I. and I. Onan. (2001) "The impact of remittances of international migrants on the standard of Living of the Left-Behind Families in Turkey"."Conference Proceedings, XXIV International Union for the Scientific Study of Population (IUSSP) General Conference, Salvador, Brazil, 18-24 April.
30. Krishnamurthy, A., & Shainesh, G. (2017). Snubbing the old to embrace the new: the impact of cross-buying on the usage of existing services. Journal of services marketing, 31(6), 662-675.
31. Kumar, S. R., & Krishnamurthy, A. (2020). Advertising, brands and consumer behaviour: The Indian context.
32. Liu, H. H., & Chiu, Y. Y. (2015). Sales framing, mental accounting, and discount assignments. Asia Pacific Management Review, 20(4), 201-209.
33. Maimbo, S. M. (2004, November). The regulation and supervision of informal remittance systems: emerging oversight strategies. In seminar on current developments in Monetary and Financial Law (Vol. 24). World Bank, Washington, DC.
34. Malpass, D. (2022, December 6). Remittances are a critical economic stabilizer. World Bank Blogs. https://blogs.worldbank.org/en/voices/remittances-are-critical-economic-stabilizer
35. Mohieldin, M., Iqbal, Z., Rostom, A., & Fu, X. (2015). The role of Islamic finance in enhancing financial inclusion in Organization of Islamic Cooperation (OIC) countries. Islamic Economic Studies, 20(2).
36. Pant B (2008): "Mobilizing Remittances for Productive Use: A Policy-oriented Approach." Nepal Rastra Bank, working paper Serial Number: NRB/WP/4, Dec 2008
37. Rasul, G., Nepal, A. K., Hussain, A., Maharjan, A., Joshi, S., Lama, A., Gurung, P., Ahmad, F., Mishra, A., & Sharma, E. (2021). Socio-economic implications of COVID-19 pandemic in South Asia: Emerging risks and growing challenges. Frontiers in Sociology, 6, Article 629693. https://doi.org/10.3389/fsoc.2021.629693
38. Ratha, D. (2019). Remittances: Funds for the Folks Back Home. Finance & Development, 56(4), 48–51.
39. Temory, M. D. (2024). Impact of remittances on household income and poverty in Afghanistan. International Journal of Development and Economic Sustainability, 12(2), 56–69. https://doi.org/10.37745/ijdes.13/vol12n25669
40. Thaler, R. H. (1985). Mental Accounting and Consumer Choice. Marketing Science, 4(3), 199–214.
41. Thaler, R. H. (1999). Mental Accounting Matters. Journal of Behavioral Decision Making, 12(3), 183–206.
42. USA for UNHCR. (n.d.). Afghanistan refugee crisis explained. https://www.unrefugees.org/news/afghanistan-refugee-crisis-explained/
43. Villa, K. M., Barrett, C. B., & Just, D. R. (2011). Differential nutritional responses across various income sources among East African pastoralists: Intrahousehold effects, missing markets and mental accounting. Journal of African Economies, 20(2), 341-375.
44. Waidler, J. (2016). On the fungibility of public and private transfers: A mental accounting approach. UNU-MERIT working Paper, 60.
45. World Bank. (2023). Migration and Development Brief 39: Remittances Remain Resilient but Are Slowing. World Bank Group. URL: https://documents1.worldbank.org/curated/en/099714008132436612/pdf/IDU-a9cf73b5-fcad-425a-a0dd-cc8f2f3331ce.pdf
46. World Bank. (2023). Migration and Remittances Data. Retrieved from https://www.worldbank.org
47. World Bank. (2024). Personal remittances, received (current US$) - Afghanistan (2005–2023). World Development Indicators. https://data.worldbank.org/indicator/BX.TRF.PWKR.CD.DT?end=2023&locations=AF&start=2005&view=chart
48. World Bank. (2026). *Afghanistan Development Update: Spring 2026*. World Bank. https://thedocs.worldbank.org/en/doc/d8a0c1c661ccdcf25dee0b6e3bfba2a0-0310012026/afghanistan-development-update-may-2026

Vol. 12 Issue 4s (August, 2026)

ISSN: 2208-2190 Pages- 21-36

DOI: https://doi.org/10.69980/5vaja283

49. Zhang, C. Y., & Sussman, A. B. (2017). The role of mental accounting in household spending and investing decisions. Client Psychology. New York: Wiley, Chicago Booth Research Paper, (19-07).
50. Henderson, P. W., & Peterson, R. A. (1992). Mental accounting and categorization. Organizational Behavior and Human Decision Processes, 51(1), 92-117.
51. Shefrin, H. M., & Thaler, R. H. (1988). The behavioral life-cycle hypothesis. Economic inquiry, 26(4), 609-643.
52. Thaler (1985) statement: "Money is not treated as fully fungible across mental accounts; funds in one account are not used to offset deficits in another."
53. Thaler (1999): "Individuals frequently refuse to use money from one mental account to cover expenses assigned to another, even when doing so would be optimal."
54. Heath & Soll (1996): "Consumers adhere to pre-set budgets even when flexibility would improve outcomes."
55. Shefrin & Thaler (1988): "Mental accounts act as commitment devices that resist reallocation under income shocks."
56. Sussman & O'Brien (2016): "Labeled income is psychologically segregated and treated differently from regular earnings".
57. Stark, O., & Bloom, D. (1985). The new economics of labor migration. American Economic Review, 75(2), 173–178.
58. Ratha, D. (2003). Workers' remittances: An important and stable source of external development finance. World Development, 31(1), 157–175.
59. Yang, D., & Choi, H. (2007). Are remittances insurance? Journal of Political Economy, 115(1), 114–142.
60. Chami, R., Fullenkamp, C., & Jahjah, S. (2003). Are immigrant remittance flows a source of capital for development? IMF Staff Papers, 52(1), 55–81.
61. Adams, R. H., & Cuecuecha, A. (2010). Remittances, household expenditure and investment. World Development, 38(11), 1626–1641.
62. Chiappori, P.-A. (1992). Collective labor supply and household behavior. Journal of Political Economy, 100(3), 437–467.
63. Deaton, A. (1997). The analysis of household surveys. World Bank.